BIG RAIN Rain panel for ceiling installation or ceiling substructure installation - Stainless Steel

IMO

41 400 979

Fits: IMO, LULU, MADISON, MEM, TARA, CL.1, LISSÉ, VAIA, META, CYO

- Rain panel with 2 different spray modes
- PURIFY RAIN, 200 x 160 mm, max. flow rate 23.5 l/min (at 3 bar)
- FULL RAIN, 360 x 280 mm, max. flow rate 13.6 l/min (at 3 bar)
- cover plate, stainless steel 600 x 480 mm
- 2x flexible connection hose 1/2" - female thread
- 4x mounting pin
- pre-fitted stainless steel enclosure
- with anti-scale system

technical data:

- minimum flow rate 25 l/min (both rain modes together)
- flow at 3bar flow pressure in conjunction with xTOOL: 39l/min
- minimum flow pressure 2 bar
- max. flow pressure 4 bar
- weight: 12kg

technical data:

plumbing:

- recommended water hardness: 6-7 °dH - if the water is harder, integrate a water softener that uses the ion exchange principle into the feed pipe.
- for choosing the drainage, taking into consideration the discharge of all the products in the shower, the specific demand needs to be assessed. Recommendation: Floor drain (connected rating) = 1l/sec, drainage rate DN 50
- feed pipe (hot/cold): 2x DN 20
- for the optimum choice of hot water storage device - taking into consideration additional drawing-off points and the frequency with which BigRain is used - the specific demand needs to be assessed.

Stainless Steel	41 400 979-85
Brushed Stainless Steel	41 400 979-86

Recommended miscellaneous

BIG RAIN Cover for supply pipes - Stainless Steel 12 940 979-85

- length 450-480 mm
- for ceiling substructure installation
- stainless steel cover 125 x 50 mm

BIG RAIN Rain panel for ceiling installation or ceiling substructure installation - Stainless Steel

IMO

41 400 979

mm [inches]

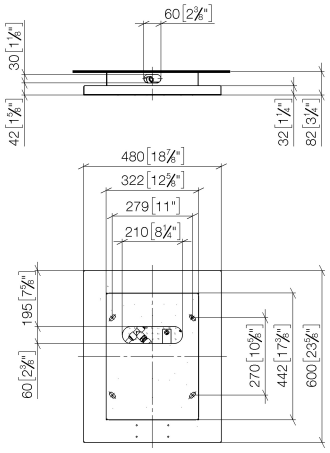

Flow rate chart

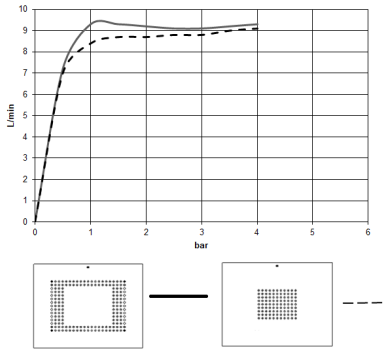

Certificates

LGA_18146.

BIG RAIN Rain panel for ceiling installation or ceiling substructure installation - Stainless Steel

IMO

41 400 979

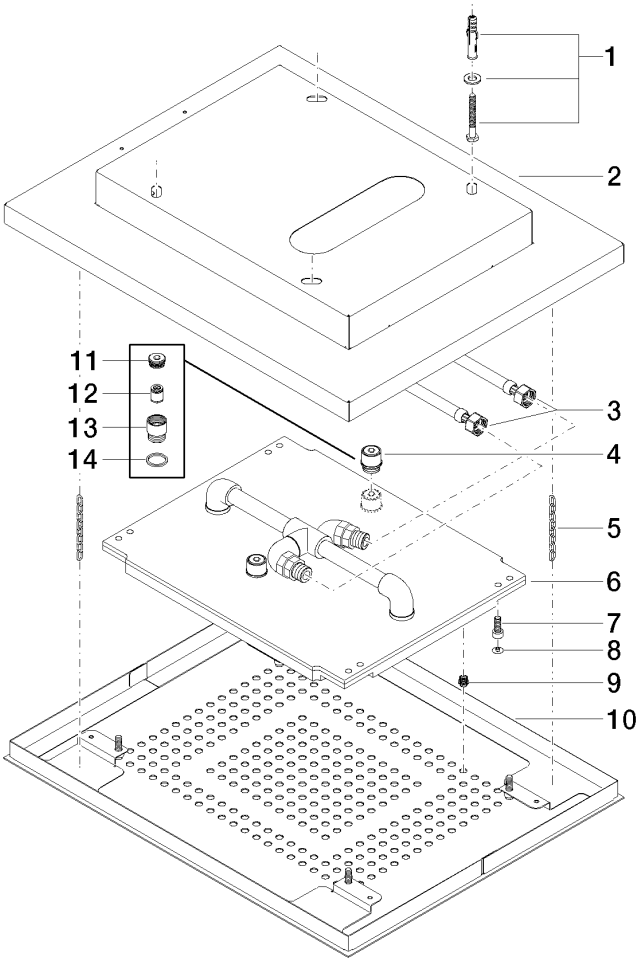

Spare parts list

No.	Item Number	Name	Quantity used	Delivery time
1	04 30 35 010 00 90	fixing set	1	2
2	04 17 09 001 00-85	casing	1	30
3	12 502 970 90	High pressure hose 1/2" x 1/2" x 400 mm -	1	2
4	90 24 03 027 02 90	nipple	2	2
5	04 21 50 004 01 90	accessories	2	2
7	09 30 30 155 90	screw	4	2
8	09 31 20 036 90	plug	4	2
9	04 29 03 035 00 90	insert	241	60
10	04 11 02 113 02-85	cover	1	30
11	09 24 04 112 10 90	nipple	1	2
12	09 23 01 042 90	insert	1	2
13	09 24 03 027 90	nipple	1	2
14	09 14 20 025 90	seal	1	2

We reserve the right to change designs, product range and technical specifications without prior notice.
More information can be found at: www.dornbracht.com +49 (0) 2371 8899 900 mail@dornbracht.com